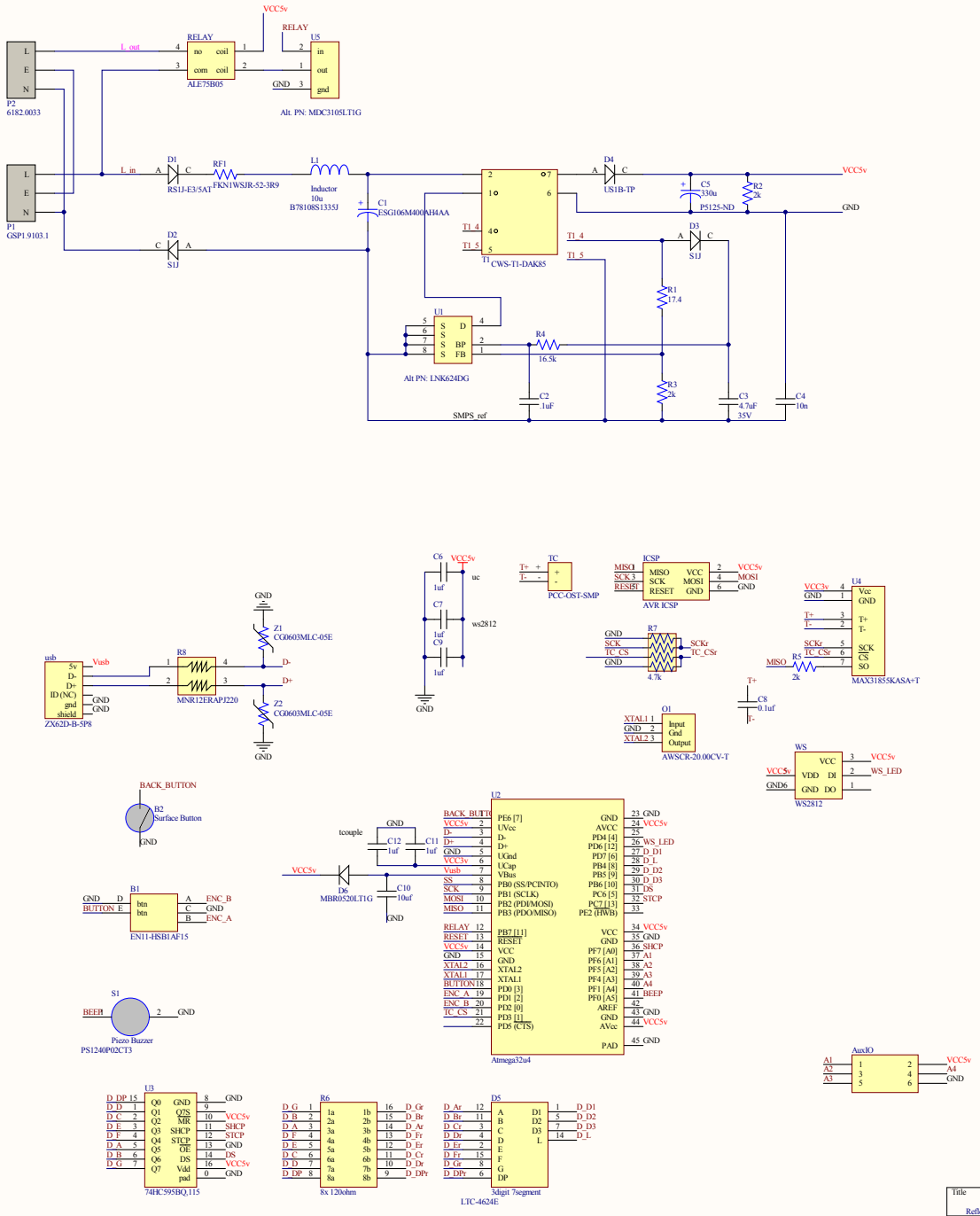

Title		
Reflowster_300a		
Size: A	Number	Revision
Date: 6/8/2015		Sheet of
File: C:\Users\...\reflowster_300a.SchDoc		Drawn By: